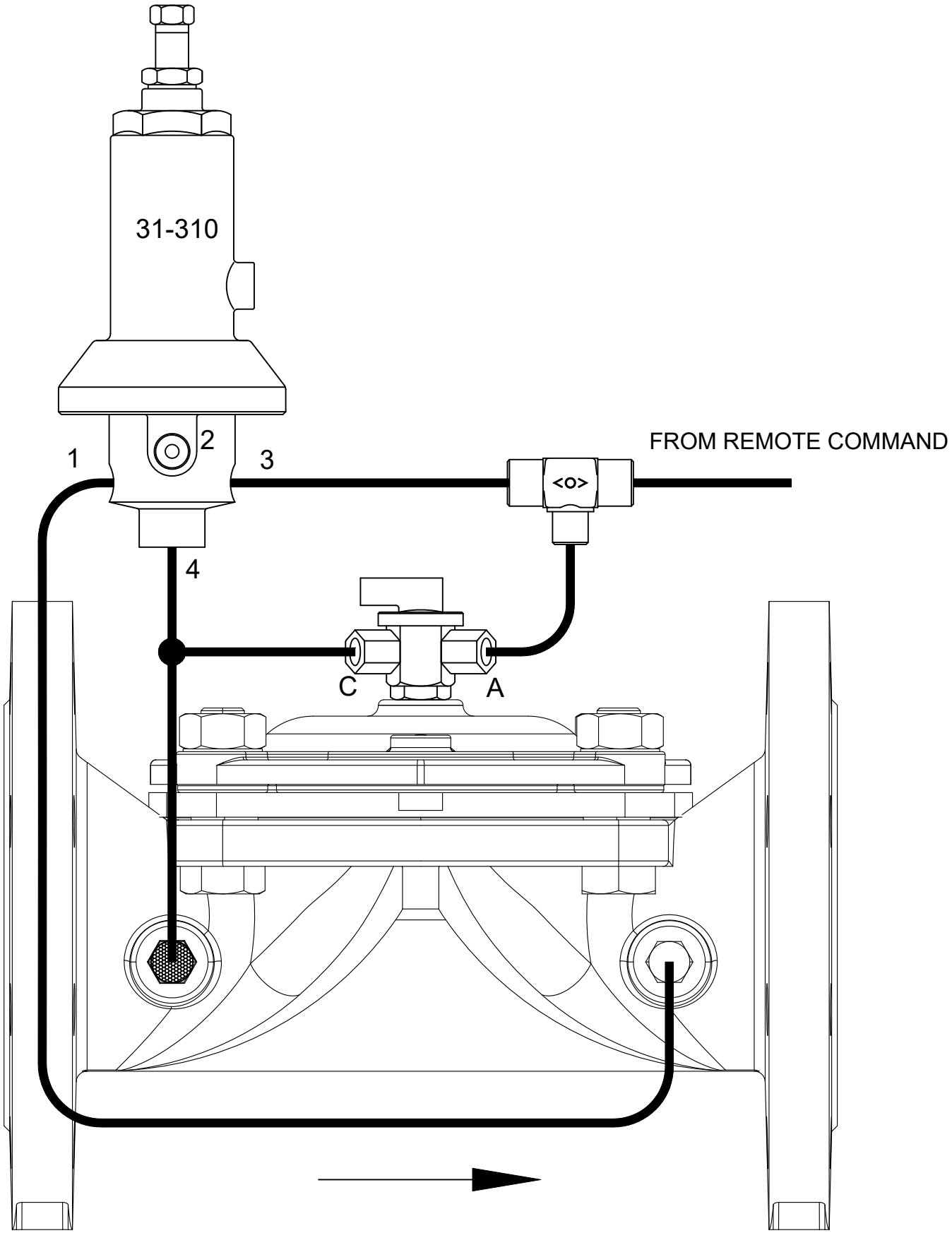

NETAFIM
Australia Pty. Ltd.
PHONE 03-8331-6500
FAX 03-9369-3865

TITLE: D-HPR (8" to 12")		DATE: 24/9/2020
DESCRIPTION: HYDRAULIC PRESSURE REDUCING VALVE WITH PRESSURE SELECTOR		PART No:
DRAWN BY: Tor Mann	VIEW: GENERAL	